ACP Series Exd & Exm – 2/2 Normally Closed

Specifications	
Function	Normally closed, energise to open Out (2) 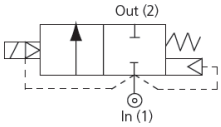 In (1)
Maximum Viscosity	115 SSU
½" - 1" Body Material (Std)	Brass CZ122
1¼" - 2" Body Material (Std)	Bronze DIN 1705
Flange Tube	Stainless Steel 303
Plunger and top stop	Stainless Steel 430FR
Springs	Stainless Steel 302
Seal Material (Std)	NBR
Connection Type (Std)	BS21
Shading Ring	Copper (std), Silver (stainless steel option)
Electrical Characteristics	
Coil Voltage DC (=)	24 V, 110 V
Coil Voltage AC 50 Hz (~)	110 V, 230 V
Voltage Tolerance	+10% or -10%
Duty Cycle	100% ED
Protection Class (Exd)	Exd IIC T6 (-50 °C to +40 °C) (IP67 BS EN 60529)
Protection Class (Exm)	Exm II 2 G T5 (-20 °C to +40 °C) (IP65 BS EN 60529)
Electrical Connection (Exd)	Via terminal block (max wire diameter 1.6 mm)
Electrical Connection (Exm)	2 metre lead 3 core
Coil Insulation	Class H (BS EN 60085) 180 °C (E5 Type)
Power Rating	14.5 Watts, 19 VA

Features and Benefits

- Heavy duty valve design
- Piston Operation
- Wide temperature range capabilities
- Choice of valve body material seals
- ATEX approved
- Response time up to 1" 40-100 ms
- Response time up to 2" 60-1000 ms

Pipe Size	Cv (gpm)	Kv (m^3/h)	OPD (Bar)	P. Max Bar	Orifice (mm)	Protection Class	Weight (kg) excluding Solenoid
½"	4.9	4.2	0.3-10.3	50	16.00	Exd T6	1.4
¾"	6.3	5.4	0.3-10.3		16.00		
1"	14.5	12.5	0.3-10.3		25.00		2.3
1¼"	20.9	18	0.3-10.3		30.00		3.0
1½"	20.9	18	0.3-10.3		30.00		
2"	24.4	21	0.3-10.3		32.00		5.2
½"	4.9	4.2	0.3-10.3		16.00	Exm T5	1.4
¾"	6.3	5.4	0.3-10.3		16.00		
1"	14.5	12.5	0.3-10.3		25.00		2.3
1¼"	20.9	18	0.3-10.3		30.00		3.0
1½"	20.9	18	0.3-10.3		30.00		
2"	24.4	21	0.3-10.3		32.00		5.2

Options Available

Solenoid Enclosure		
Protection Class	Electrical Entry	Enclosure Material
EExd T6 (IP67)	M20 x 1.5 Female (Std) (½" NPT conduit entry option)	Aluminium (Std) Stainless Steel optional
EExd T4 (IP67)		
Exm T5 (IP65)	M16 x 1.5 male flying lead	Powder coated metal

Main Valve Body Options
Stainless steel body 316 (available up to 1")
Oxygen Cleaning (Consult Rotork Midland for product code)
NPT Threads
Stainless steel tagging

[1] See corrosion reference guide and sealing solutions for material compatability.

Seal Material[1] and Media Temp. Range	EXD Ambient Temperature Range °C			EXM Ambient Temperature Range °C	
	Min	Max (T6)	Max (T4)	Min	Max (Exm)
NBR (-10 °C to +80 °C)	-10	40	70	-10	40
EPDM (-50 °C to +120 °C)	-50	40	70	-20	40
FKM (-20 °C to +150 °C)	-20	40	70	-20	40

How to use the flow chart

1. Select the required flow.
2. Note the corresponding pressure drop.
3. Based on where the two points intersect select the most appropriate model.

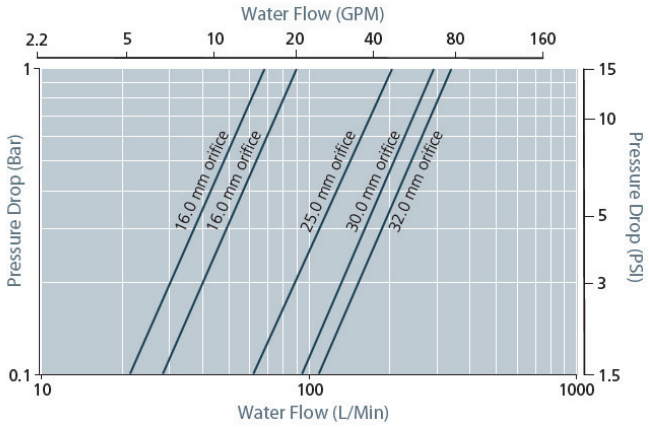

ATEX

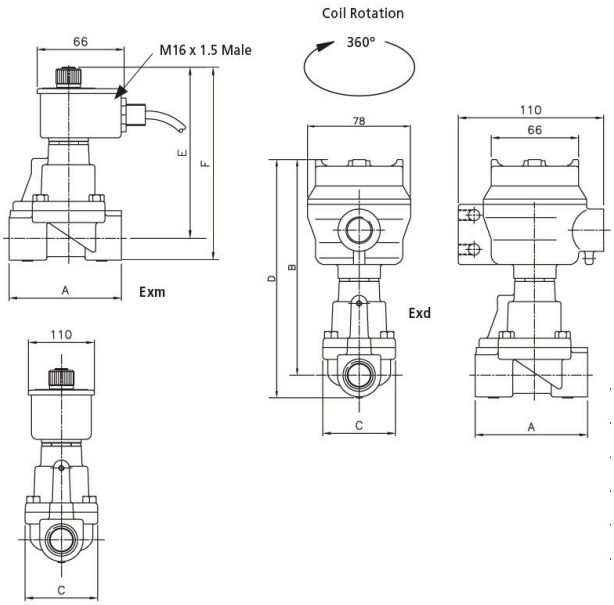

Preferred Valve Mounting Options

Dimensions

Pipe Size	A	B	C	D	E	F
3/8" - 3/4"	85	149	75	165	105	122
1"	85	179	75	198	135	155
1¼" - 1½"	117	177	83	252	133	209
2"	146	189	103	252	145	209

Dimensions given in mm

Solenoid enclosures

S4 Exd enclosure

Power consumption:	Holding 19 VA, 12 V to 230 V, 50 / 60 Hz. 14.5 W, 12 V to 212 VDC
External material:	Powder coated aluminium or 316 st.st. enclosure with st.st. nameplate
Electrical entry:	M20 x 1.5 or ½" NPT conduit entry
Protection Class:	II 2 G Exd IIC T6 for ambient temp -50 °C to +40 °C
Optional:	II 2 G Exd IIC T4 for ambient temp -50 °C to +70 °C
Additional Weight	0.8 kg - Aluminium or 1.5 kg - Stainless Steel

S4 Exm enclosure

Power consumption:	Holding 16 VA, 12 V to 230 V, 50 / 60 Hz. 10 W 12, 24 VDC
External material:	powder coated metal enclosure with st.st. nameplate
Electrical entry:	2 metre length of approved 3 core cable with M16 conduit male winding insulation class
Protection Class:	II 2 G Exm II T5 for ambient temperatures -20 °C to +40 °C
Additional weight:	0.5 kg

Coding chart

Main Valve Assembly

Model		Valve Body Conn. Size		Connection Type		Operation		Body Material		Seals		Style	
22	ACP Exd	D	½"	1	BS21	1	AUTO	1	Brass (standard on valves up to and including 1")	A	NBR	1	Standard (Inc Exm)
		E	¾"	2	BSP G	2	MANUAL OVERRIDE	2	Bronze (standard on valves above 1")	B	EPDM	3	Exd
		F	1"	3	NPT			5	316 Stainless Steel (option available up to and inc 1")	C	FKM		
		G	1¼"	4	FLANGED (PN16 STD)								
		H	1½"										
		J	2"										

22	•	•	•	Z	•	•	1	-

Coil options

Enclosure		Voltage / Frequency		Electrical Connection		Approval	
5	Exd Aluminium	E2	230 V / 50 Hz	5	M20 x 1.5	9	Atex T6
6	Exd Stainless Steel	H2	110 V / 50 Hz & 120 V / 60 Hz	9	½" NPT	949	Atex T4
		F1	24 VDC				

•	••	•	9

4	••	E

Enclosure		Voltage / Frequency		Electrical Connection	
4	Exm	M1	230 V / 50 Hz	E	3 metre lead M16 EXM
		M2	110 V / 50 Hz		
		M4	24 VDC		

Product coding example:

22H21Z2A3-5E259 - ACP Series
1½" BSPG, auto operation, bronze body, NBR seals, Exd Aluminium 230 V / 50 Hz M20 x 1.5.

V-FLOW SOLUTIONS LTD